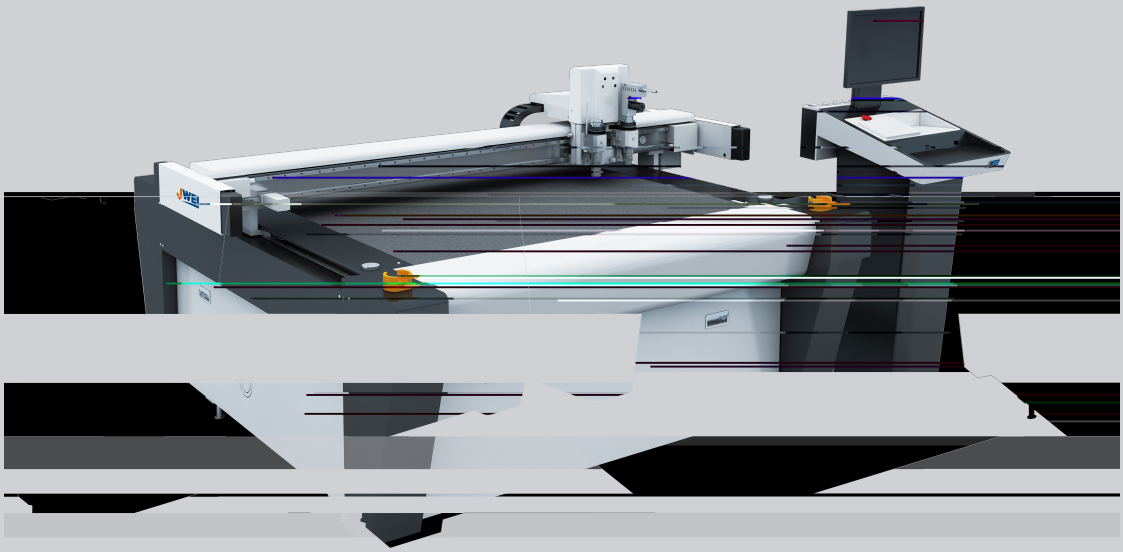

Automatic Edge Finding Cut/Back Cut

Accurate Tool Alignment System

High-end 6 Axis High Speed Motion Control System

Independent Vacuum Adsorption

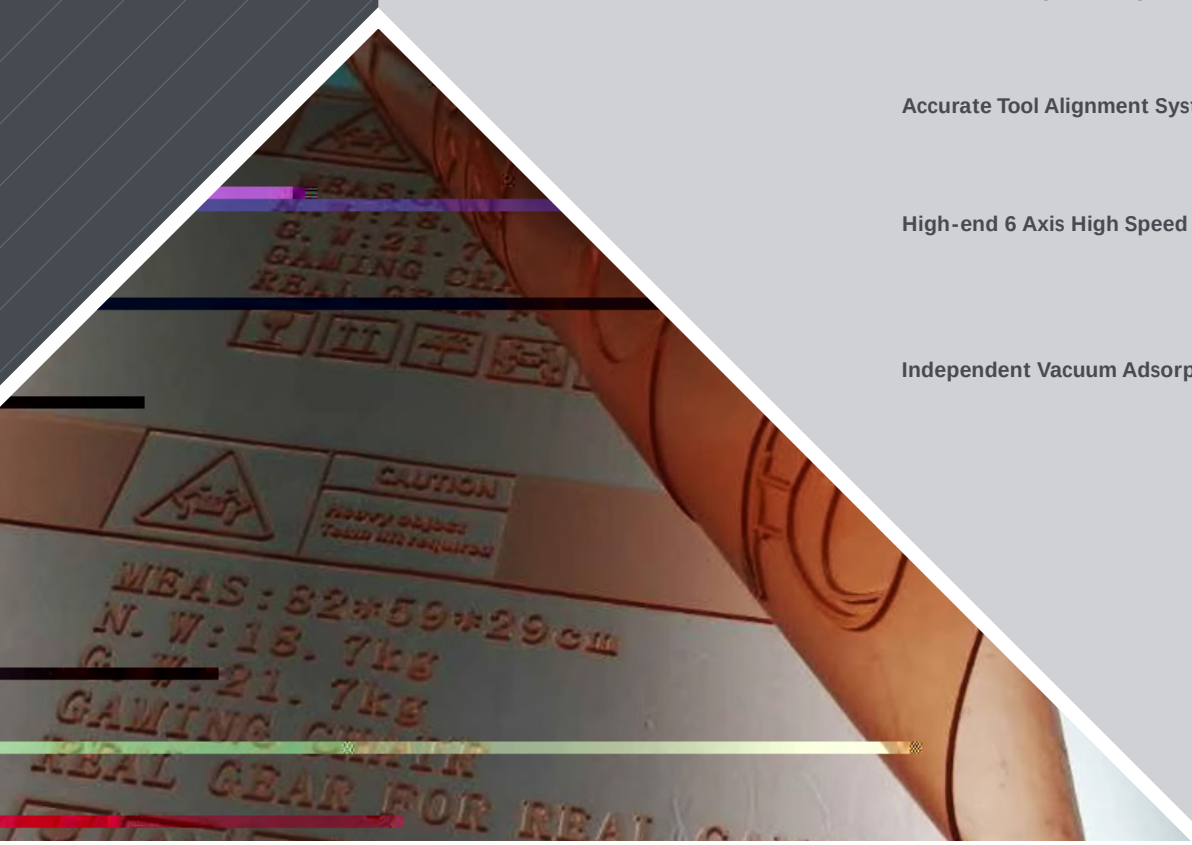

Flexo application

E-CUTTER

Product
Introduction

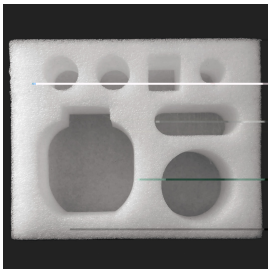
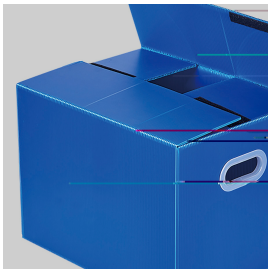
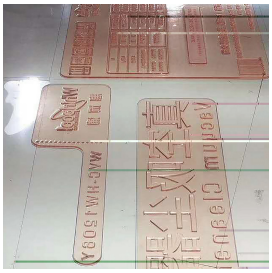

Materials

Tools

Parameters

NINGBO JINGWEI SYSTEMTECHNIK LTD.